Encore™ ESP Pro Main Assembly

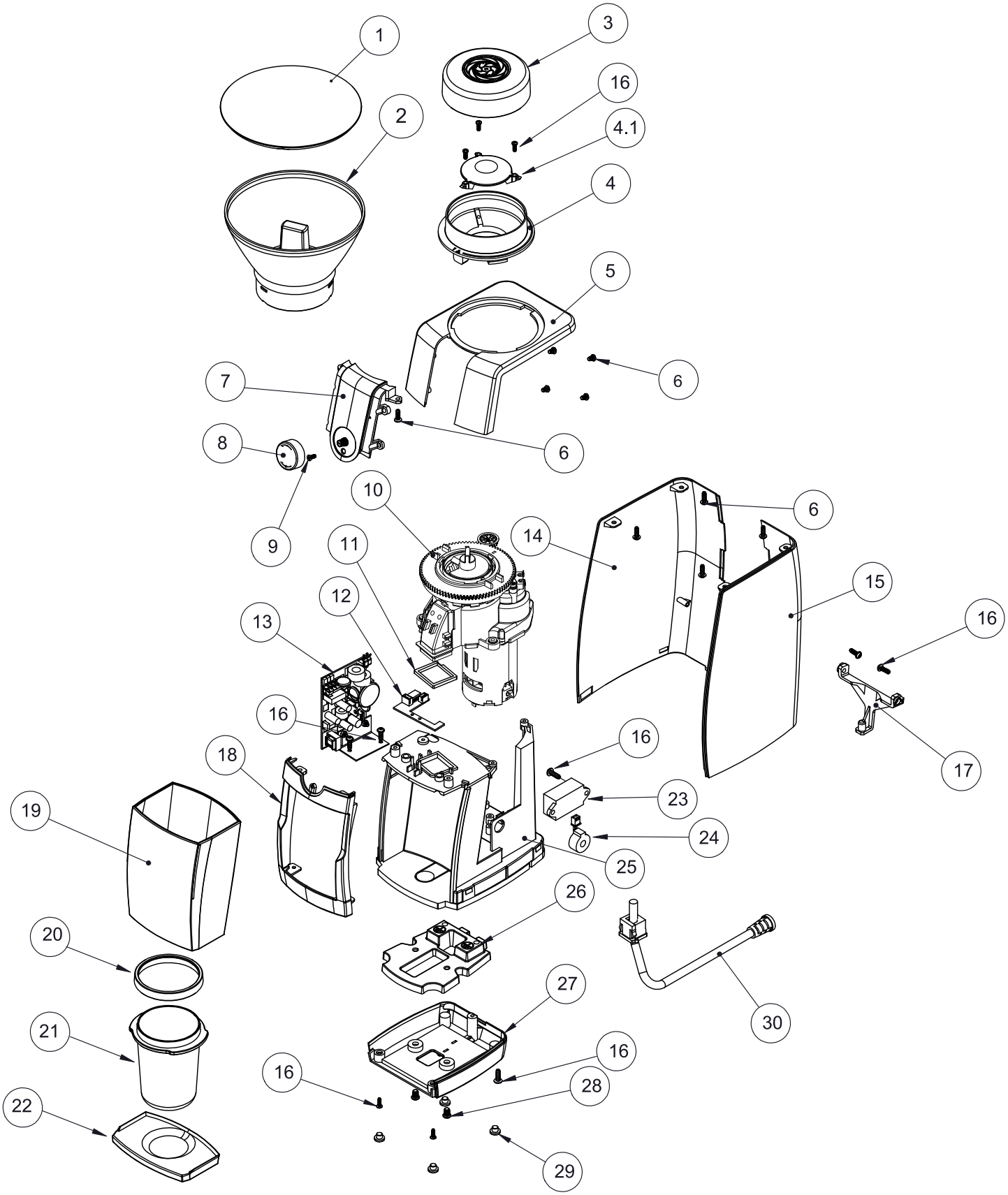

Encore™ ESP Pro Main Assembly

Label	Search Name	Item Number		Total Used
1	1010	SP0101048	Hopper Lid Clear	1
2	6811	SP0108598	Hopper w/ Pad Printing (Encore ESP Pro)	1
3	6810	SP0108743	Lid, Single Dose Hopper	1
4	6816	SP0108759	Adjustment Collar Assembly	1
4.1	6817	SP0108760	Finger Guard (Part of 6816)	1
5	6854	SP0108599	Top Case (Encore ESP Pro)	1
6	F6816	SP0108679	M3x5 Truss Head Phillips Machine Screw	10
7	6835	SP0108608	Display Assembly (Encore ESP Pro)	1
7	6834	SP0108745	Display Lens (Part of 6835)	1
7	6830	SP0108609	Control Board and Interface (Part of 6835)	1
8	6836	SP0108611	Knob Assembly (Encore ESP Pro)	1
9	F1231	SP0101427	M3 x 6 Machine Screw	1
10	N/A	N/A	Grind/Motor Assembly - See next page	1
11	6089	SP0101039	Grounds Chute Gasket	1
12	6881	SP0108744	Grounds Bin LED Assembly (Encore ESP Pro)	1
13	6882	SP0108606	120v Power Board (Encore ESP Pro)	1
13	6883	SP0108607	230v Power Board (Encore ESP Pro)	1
14	6851	SP0108600	Left Side Case (Encore ESP Pro)	1
15	6852	SP0108601	Right Side Case (Encore ESP Pro)	1
16	F6121	SP0101077	Plastic Thread Cutting Screw, M3 X 11	15
17	6853	SP0108602	Side Case Bracket (Encore ESP Pro)	1
18	6831	SP0108604	Front Bezel (Encore ESP Pro)	1
19	6142	SP0100992	Grounds Bin, Clear w/Fill Line	1
20	6741	SP0102051	58mm Dosing Cup Adapter Ring	1
21	6740	SP0102050	Dosing Cup	1
22	6742	SP0102052	Dosing Cup Base	1
23	6889	SP0108857	Ion Generator	1
24	6888	SP0109205	Current Sensor	1
25	6514	SP0101540	Chassis (Conical Grinder Series)	1
26	6021	SP0100952	Ballast (Conical Grinder Series)	1
27	6845	SP0108603	Base (Encore ESP Pro)	1
28	F6122	SP0101106	M6-1.25x8 Machine Screw	2
29	6049	SP0101179	Rubber Foot	4
30	6302	SP0100903	A Plug, Cord	1
30	4231	SP0100906	F Plug, Cord	1
30	4232	SP0100909	G Plug, Cord	1
30	4234	SP0100912	I Plug, Cord	1
30	4238	SP0102221	J Plug, Cord	1
30	4233	SP0100918	Korea Plug, Cord	1

Encore™ ESP Pro Grind/Motor Assembly

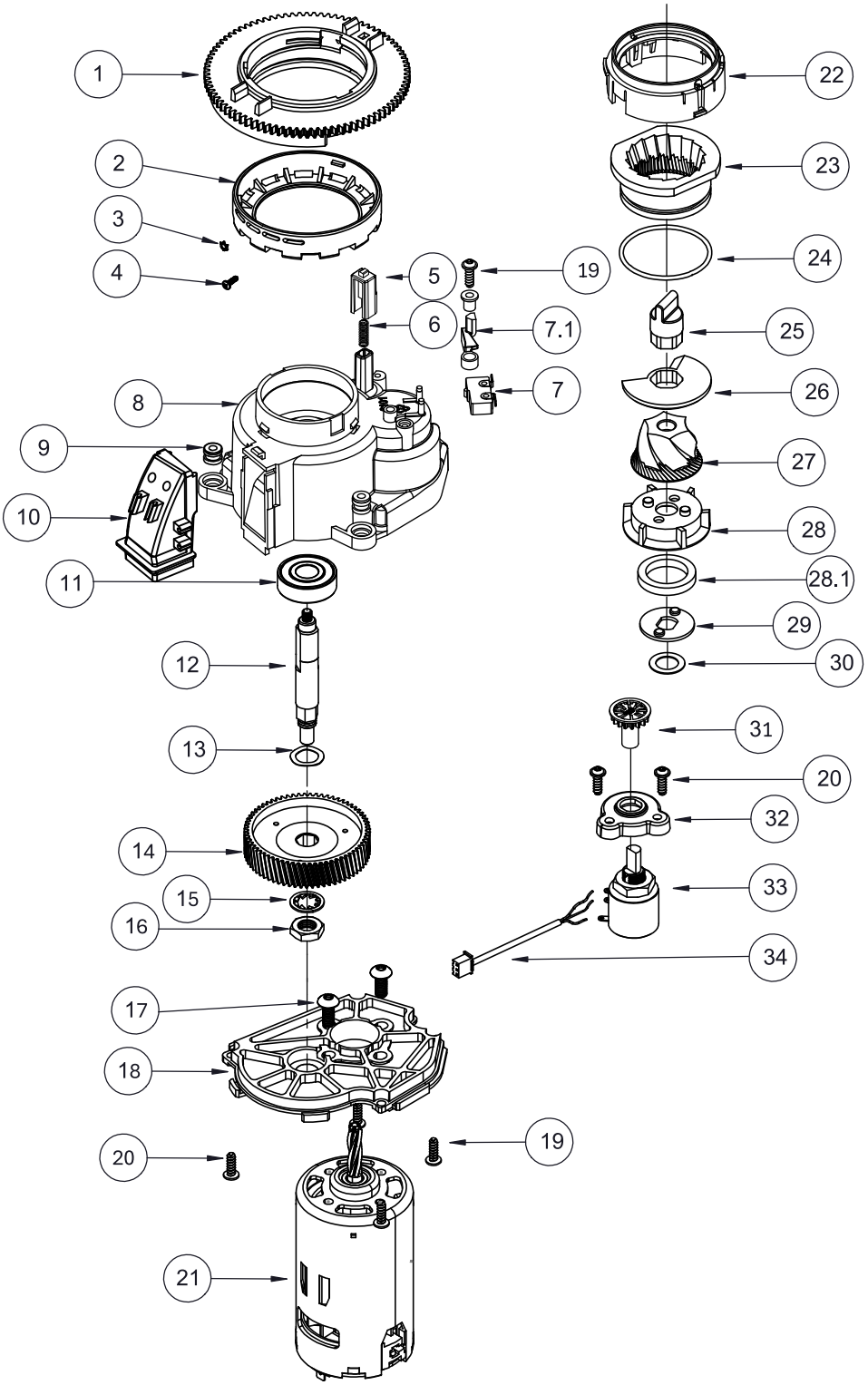

Encore™ ESP Pro Grind/Motor Assembly

Label	Search Name	Item Number	Part Description	QTY
1	6876	SP0108595	Metal Adjustment Ring (Encore ESP Pro)	1
2	6777	SP0102367	Calibration Ring (ESP)	1
3	F6786	SP0102073	Set Screw Star Washer (ESP)	1
4	F6788	SP0109242	M2x6 Low Profile Philips Machine Screw	1
5	6896	SP0108597	Friction Detent (Encore ESP Pro)	1
6	6197	SP0100997	Detent Spring	1
7	6032	SP0101129	Micro Switch	1
7.1	6732	SP0109342	Lever, Hopper Interlock Switch	1
8	6001	SP0108748	Gearbox Housing Assembly (Conical GB 3.0)	1
9	6105	SP0101037	Grommet Sleeve Assembly	3
10	6088	SP0101038	Ground Chute	1
11	6897	SP0108758	Drive Shaft Ball Bearing (Conical Series)	1
12	6779	SP0102058	ESP Drive Shaft	1
13	F6785	SP0102072	Wave Washer	1
14	6092	SP0108747	Main Drive Gear v2 (Conical Series)	1
15	F6193	SP0101110	M8 Internal Tooth Star Lock Washer	1
16	F6192	SP0101109	M8 Hex Nut	1
17	F6189	SP0101103	M5x12 Machine Screw	2
18	6095	SP0108746	Conical Motor Mounting Plate v2	1
19	F6121	SP0101077	M3.5x11 Plastic Thread Cutting Screw	15
20	F6119	SP0101084	M3x20 Machine Screw	2
N/A	F6120	SP0101076	M3 Hex Nut	2
21	6026	SP0100799	120V Motor for Conical Burr Grinders	1
21	6027	SP0100800	230V Motor for Conical Burr Grinders	1
22	6868	SP0108593	Ring Burr Holder (Encore ESP Pro) (Part of 6874)	1
23	6170	SP0101070	M2 Ring Burr	1
24	6065	SP0101175	Ring Burr O-Ring	1
25	6878	SP0108596	Quick Release Knob (Encore ESP Pro)	1
26	6877	SP0108757	Flow Control Disk	1
27	6775	SP0102055	M2 Cone Burr (Encore ESP and Encore ESP Pro)	1
28	6880	SP0108751	Paddle Wheel (6803) W/Thin Felt (6781)	1
28.1	6781	SP0102060	Thin Felt (Part of 6880)	1
29	F8788	SP0102075	Metal Drive Shim	1
30	F6086	SP0101348	M10-16mmOD, 0.50mm Thick Washer Shim	1
31	6892	SP0108754	Potentiometer Spur Gear (Part of 6891)	1
32	6893	SP0108755	Potentiometer Mounting Plate (Part of 6891)	1
33	6879	SP0108610	Grind Adjustment Potentiometer (Part of 6891)	1
34	6894	SP0108756	Potentiometer Wire Assembly (Part of 6891)	1
N/A	6891	SP0108753	Potentiometer Assembly (Includes 6892, 6893, 6879, 6894)	1
N/A	6898	SP0109341	Wire, Hopper Interlock Switch to Motor	1
N/A	6822	SP0109345	Motor Wire, with Hopper Interlock	1
N/A	6823	SP0109346	Ribbon Cable, 4 Wire Power Board to Display	1
N/A	6824	SP0109347	Ribbon Cable, 6 Wire LED Board to Display	1